Published: 27th June 2025

ANACHEM JOURNAL
ISSN: 2006-5221 (Online)

CHALLENGES AND PROSPECTS OF EARTH LEAKAGE CIRCUIT BREAKER ADOPTION IN NIGERIA'S RESIDENTIAL AND INDUSTRIAL SECTORS

[*1]Anierobi P.O., [2] Egbunike A. J.

[1,2] Department of Electrical/Electronic Engineering, Federal Polytechnic Oko, Anambra State.
***Corresponding author's e-mail:** Patrick1anierobi@gmail.com, patrick.anierobi@federalpolyoko.edu.ng, and john.ananti@federalpolyoko.edu.ng

DOI: https://doi.org/10.5281/zenodo.15733961

ABSTRACT

Electrical safety remains a critical concern in Nigeria due to the frequent occurrences of electrical hazards such as electrocution, fire outbreaks, and damage to equipment caused by leakage currents. Earth Leakage Circuit Breakers have been widely recognized as effective protective devices for detecting and interrupting leakage currents, thereby preventing electrical accidents. However, the adoption of earth leakage circuit breakers in Nigeria's residential, commercial, and industrial sectors faces several challenges, including high costs, a lack of public awareness, inadequate regulatory enforcement, and the prevalence of substandard electrical products. This paper provides a comprehensive review of the challenges hindering the adoption of earth leakage circuit breakers. It explores the prospects of integrating the earth leakage circuit breaker into Nigeria's electrical safety framework. It examines key factors such as regulatory policies, economic considerations, technological advancements, and the role of public-private partnerships in promoting the adoption of earth leakage circuit breakers. The study highlights the need for stricter safety regulations, enhanced consumer awareness programs, and incentives to encourage local manufacturing and affordability of earth leakage circuit breakers. Additionally, the potential of smart earth leakage circuit breakers in modernizing Nigeria's power distribution system is discussed. By addressing these challenges and leveraging opportunities, the widespread adoption of earth leakage circuit breakers can significantly reduce electrical accidents, enhance power system safety, and align Nigeria with global electrical protection standards.

Keywords: Earth Leakage Circuit Breakers, Residual Current Circuit Breakers, Voltage-operated ELCBs.

INTRODUCTION

Electrical accidents in Nigeria have been a major cause of fatalities, property damage, and industrial losses. Factors such as inadequate safety regulations, outdated electrical installations, and low awareness levels have contributed to an increased risk of electrical hazards (Okoro & Madueme, 2020). One of the most effective safety measures in electrical systems is the earth leakage circuit breaker, designed to detect leakage currents and disconnect power before they pose a threat to humans and equipment. Despite the proven benefits of the earth leakage circuit breaker in preventing

electrocution and electrical fires, their adoption in Nigeria remains low, especially in residential and industrial installations (Ugwuegbu, 2021). The challenges hindering the earth leakage circuit breaker adoption range from economic barriers and the high cost of quality protective devices to regulatory weaknesses that fail to enforce mandatory installation in new buildings and industrial setups (Adesina, 2022). Additionally, the Nigerian electrical market is plagued with substandard and counterfeit circuit breakers, further discouraging consumers from investing in reliable safety devices. Moreover, many existing electrical infrastructures in Nigeria are incompatible with modern earth leakage circuit breakers, making retrofitting expensive and technically demanding.

Despite these challenges, there are significant opportunities to enhance the earth leakage circuit breaker adoption through improved regulatory frameworks, financial incentives, and awareness campaigns. The increasing focus on electrical safety and modern smart grid developments presents a unique chance to integrate the earth leakage circuit breaker into Nigeria's electrical systems effectively (World Bank Report, 2023). This paper explores both the challenges and prospects associated with the earth leakage circuit breaker adoption in Nigeria's residential and industrial sectors, providing insights into strategies that can enhance safety and compliance across the country.

OVERVIEW OF EARTH LEAKAGE CIRCUIT BREAKERS

Earth Leakage Circuit Breakers (ELCBs) are critical safety devices in electrical systems, designed to detect and interrupt leakage currents that could lead to electrocution or electrical fires. These devices function by continuously monitoring the current balance between the live and neutral conductors (Patel & Sharma, 2019). If a leakage current exceeding the preset threshold is detected, the Earth Leakage Circuit Breaker disconnects the power supply to prevent hazards (Singh & Kumar, 2020). The primary role of the earth leakage circuit breaker is to provide personal and fire protection in both residential and industrial electrical installations.

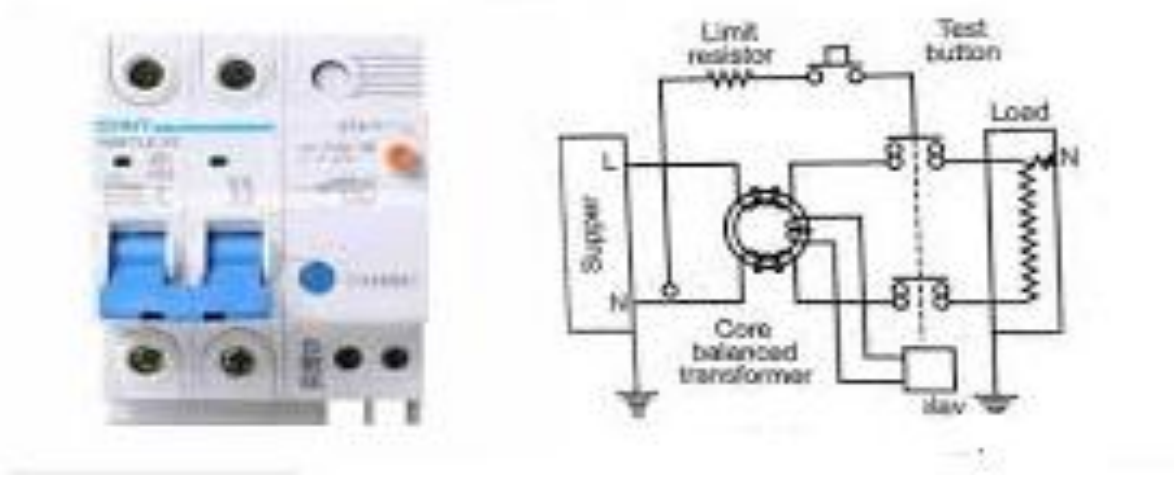

Figure 1: Earth Leakage Circuit Breakers (www.engineeringa2z.com)

TYPES OF EARTH LEAKAGE CIRCUIT BREAKERS

Earth leakage circuit breakers are classified

into two main types based on their operating principles:

a) **Voltage-operated Earth Leakage Circuit Breakers (V-ELCBs)**: This device operates on the voltage level between the earth and the body of the equipment. The voltage difference is used to detect the leakage current and instantly break the circuit. In Figure 2 below, the terminals for both phases and neutral on both supply and load sides are shown. It has two extra terminals that connect with the equipment's body and the earth. These terminals are actually connected with the electromagnetic relay, and they play a vital role in breaking the circuit during current leakage.

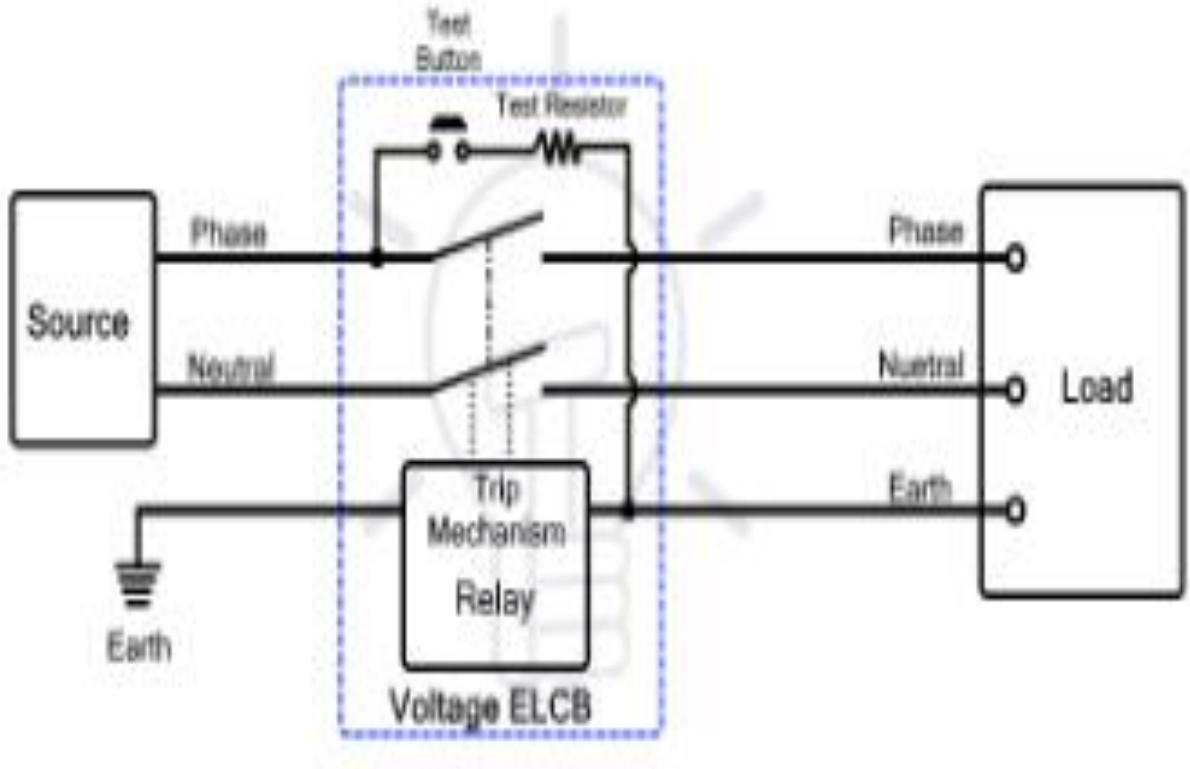

Figure 2: Voltage-operated ELCB (https://www.electricaltechnology.org/2021/09/elcb-earth-leakage-circuit-breaker.html)

WORKING PRINCIPLE: VOLTAGE-OPERATED EARTH LEAKAGE CIRCUIT BREAKERS

One of the terminals of the relay coil is directly connected to the earth, while the other terminal is connected to the body of the equipment. The coil can sense the voltage difference between the earth and the body of the equipment. If the live wire breaks or its insulation fails and comes in contact with the body of the equipment, a voltage difference appears across the terminals of the coil. As a result, the current starts to flow through the coil, and it is energized. The relay starts to generate electromagnetic force. When the current exceeds a certain limit, the relay produces sufficient force to pull the latch. By doing so, the latch break opens the contacts and disconnects the power supply to the equipment, and prevents electrical shock. Therefore, the earth connection is necessary as the relay only operates when the leakage current flows through it. If the current leaks through any other parts of the circuit and

flows through any other unintended path, it will not break the circuit, as the current must flow through the relay in order to break the circuit.

b) **Current-operated ELCBs (Residual Current Circuit Breakers - RCCBs)**: A current-operated Earth Leakage Circuit Breaker, commonly known as a Residual Current Device (RCD) or Residual Current Circuit Breaker (RCCB), is another type of Earth Leakage Circuit Breaker that breaks the circuit upon sensing any leakage current. It operates on the current difference between the phase and neutral line. The difference appears when the current leaks from the phase line. Therefore, residual current circuit breaker offers more accurate and faster protection against any leakage current and are widely used in modern electrical systems (Mohammed & Adeyemi, 2021). It has four terminals, having two input and two output terminals for phase and neutral. The phase-in and neutral in are connected to the supply, while phase-out and neutral out are connected to the load as shown in Figure 3 below. It does not have that extra terminal for an earth connection.

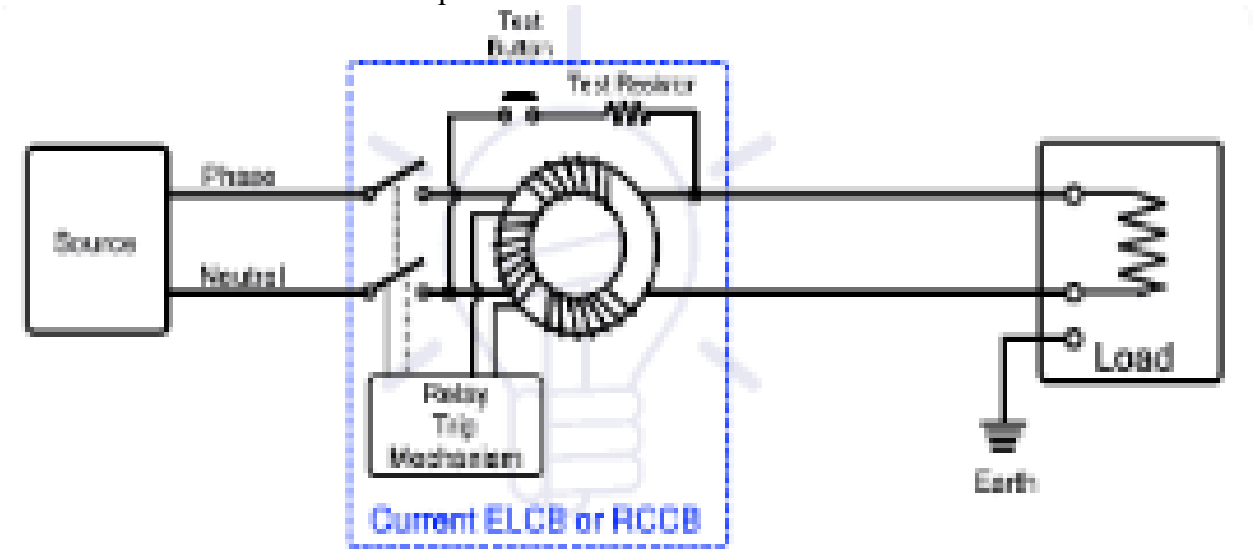

Figure 3: Current-operated ELCBs (https://www.electricaltechnology.org/2021/09/elcb-earth-leakage-circuit-breaker.html)

WORKING PRINCIPLE: CURRENT-OPERATED EARTH LEAKAGE CIRCUIT BREAKERS

The residual current circuit breaker works based on the current imbalance between the phase and neutral line. It continuously monitors the phase and neutral current. Under normal conditions, both phase and neutral current are equal because it is the same current flowing back from the load. If the current leaks through any unintended path, the neutral current is reduced and causes an imbalance. When the imbalance exceeds a certain limit, the residual current circuit breaker breaks the contacts and disconnects the power supply.

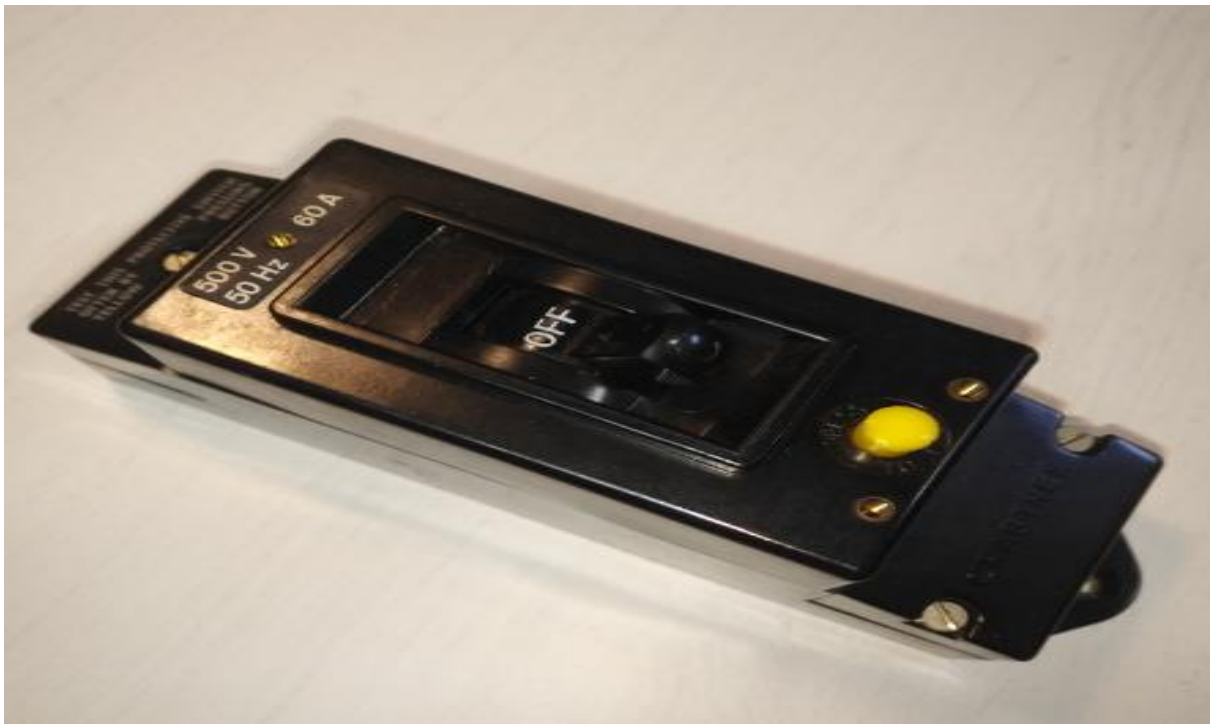

Figure 4: Residual current circuit Breaker

A residual current circuit breaker operates on the principle of Kirchhoff's current law, which states that the amount of current entering the load through the hot wire must equal the amount of current leaving the load through the neutral wire. The difference between these two currents, known as residual current, should be zero. If there is a difference, it indicates that current is leaking somewhere, causing an imbalance. A residual current circuit breaker includes a zero-sequence current transformer with three coils: the phase coil, neutral coil, and search coil. It is utilized to detect the imbalance or difference between the two currents. The phase coil and neutral coil are wound around the toroidal core in such a way as to cancel each other's flux. When the currents are equal, as they should be under normal conditions, the resultant flux cancels out, and there will be no induced current in the search coil. If there is a leakage current, the current difference will produce a flux that induces voltage in the search coil. Since the search coil is connected to the relay trip mechanism, it will break the contacts and disconnect the power supply to the load.

COMPARISON WITH OTHER PROTECTIVE DEVICES

Earth leakage circuit breakers differ from other circuit protection devices such as Miniature Circuit Breakers (MCBs) and fuses. While miniature circuit breakers and fuses protect against overcurrent and short circuits, they do not detect leakage currents that pose a significant electrocution risk. This distinction makes the earth leakage circuit breaker indispensable for comprehensive electrical safety (Hassan & Olalekan, 2022).

GLOBAL ADOPTION AND STANDARDS

International electrical safety standards mandate the use of the earth leakage circuit breaker in residential and industrial setups. Countries with stringent electrical regulations, such as the United States,

Germany, and Japan, have achieved significant reductions in electrical accidents due to the widespread adoption of the earth leakage circuit breaker. The International Electrotechnical Commission (IEC) and other regulatory bodies have developed guidelines to standardize earth leakage circuit breaker implementation worldwide (IEC 60364-4-41, 2020).

CHALLENGES HINDERING EARTH LEAKAGE CIRCUIT BREAKER ADOPTION IN NIGERIA

Electrical safety remains a significant concern in Nigeria due to frequent cases of electrocution, electrical fires, and damage to appliances resulting from leakage currents. Earth leakage circuit breakers are essential protective devices designed to prevent such hazards by detecting leakage currents and disconnecting power before they pose a threat (Singh & Kumar, 2020). However, despite their effectiveness, the earth leakage circuit breaker adoption in Nigeria's residential and industrial sectors remains limited. Several factors contribute to this challenge, including:

- **Lack of Awareness and Technical Knowledge:** One of the primary barriers to the adoption of earth leakage circuit breakers in Nigeria is the limited awareness among homeowners, electricians, and industrial facility managers regarding the importance and benefits of the earth leakage circuit breaker. Many individuals assume that conventional Miniature Circuit Breakers (MCBs) or fuses provide adequate protection against electrical faults, unaware that these devices do not detect leakage currents (Olawale & Adebayo, 2021). Additionally, many electricians lack proper training on earth leakage circuit breaker installation and maintenance, leading to incorrect installations or outright avoidance of the technology. The lack of structured educational programs on electrical safety further exacerbates the issue, resulting in a preference for outdated protective devices.
- **High Cost and Economic Constraints:** The financial burden associated with the earth leakage circuit breaker adoption is another significant challenge. High-quality earth leakage circuit breakers, especially residual current devices with low trip thresholds, are more expensive than conventional circuit breakers (Akinola *et al.,* 2022). In a country where economic constraints heavily influence consumer choices, many households and businesses prioritize cost savings over electrical safety. Additionally, the absence of government subsidies or financial incentives discourages individuals and industries from investing in the earth leakage circuit breaker, further limiting their adoption.
- **Prevalence of Substandard and Counterfeit Electrical Products:** Nigeria's electrical market is inundated with counterfeit and substandard electrical components, including fake earth leakage circuit breakers that fail to function as intended. Weak enforcement of quality control regulations has enabled unscrupulous manufacturers and importers to distribute these inferior products, resulting in frequent malfunctions and consumer distrust in earth leakage circuit breaker technology (Ogbuagu & Chinedu, 2023). The lack of effective consumer protection measures means that even those willing to invest in the earth leakage circuit breaker may unintentionally purchase ineffective products, undermining confidence in their reliability.
- **Weak Regulatory Framework and Enforcement:** Despite the existence of electrical safety standards, regulatory

enforcement remains inadequate. Agencies such as the Standards Organisation of Nigeria (SON) and the Nigerian Electricity Regulatory Commission (NERC) have yet to fully implement strict policies mandating the installation of the earth leakage circuit breaker in residential and industrial buildings (Ojo *et al.,* 2022). Unlike many developed countries where electrical safety laws require the earth leakage circuit breaker in all new installations, Nigeria lacks comprehensive legislation that enforces their usage. Additionally, building codes and safety regulations are often poorly implemented, allowing developers and contractors to bypass essential protective measures.

- **Infrastructure and Installation Challenges:** Many older buildings and industrial facilities in Nigeria have outdated electrical systems that are incompatible with modern earth leakage circuit breakers. Retrofitting such systems requires significant modifications, including proper earthing and rewiring, which can be expensive and technically challenging (Adeyemi & Hassan, 2023). As a result, property owners and industries often avoid the additional costs associated with the earth leakage circuit breaker installation. Furthermore, a shortage of trained electrical professionals with expertise in the earth leakage circuit breaker integration compounds the issue, making it difficult for consumers to find skilled technicians capable of proper installation.
- **Resistance to Change and Industry Practices:** Many electricians and electrical contractors continue to rely on traditional circuit protection methods due to familiarity and ease of installation. The reluctance to adopt new safety technologies stems from both a lack of exposure to modern electrical safety standards and the preference for cheaper, more readily available alternatives (Hassan & Olalekan, 2022). Additionally, industrial users often prioritize cost efficiency over safety enhancements, particularly in sectors where electrical maintenance budgets are constrained.

PROSPECTS OF EARTH LEAKAGE CIRCUIT BREAKER (ELCB) ADOPTION IN NIGERIA

The adoption of earth leakage circuit breakers in Nigeria presents significant prospects in improving electrical safety in residential, commercial, and industrial applications. With increasing concerns about electrical hazards, such as electrocution and fire outbreaks caused by leakage currents, the demand for advanced protective devices is growing. Several factors are expected to drive the adoption of the earth leakage circuit breaker in Nigeria, including:

- **Strengthening of Electrical Safety Regulations:** One of the most promising prospects for the earth leakage circuit breaker adoption in Nigeria lies in the potential for stricter regulatory enforcement. The Nigerian Electricity Regulatory Commission (NERC), the Standards Organisation of Nigeria (SON), and other regulatory bodies are increasingly recognizing the importance of adopting advanced circuit protection devices for safety measures (Ojo *et al.,* 2022). The inclusion of the earth leakage circuit breaker as a mandatory requirement in the Nigerian Building Code and electrical safety regulations could significantly drive adoption rates, as compliance would become a legal necessity. Lessons from countries such as India and South Africa show that government-mandated earth leakage circuit breaker installation in residential and industrial facilities drastically reduces electrical hazards (Singh & Kumar, 2020).

- **Increased Public Awareness of Electrical Safety Campaigns:** Public awareness campaigns play a crucial role in driving the adoption of the Earth Leakage Circuit Breaker in Nigeria. Many electrical accidents occur due to ignorance about protective measures, but safety education initiatives by government agencies, non-governmental organizations (NGOs), and professional bodies like the Nigerian Society of Engineers (NSE) are improving knowledge about the benefits of the earth leakage circuit breaker (Olawale & Adebayo, 2021). Increased media coverage and safety training programs in schools and workplaces can further promote the importance of the earth leakage circuit breaker, making them a preferred choice for residential and industrial applications.
- **Economic Growth and Rising Household Income:** As Nigeria's economy expands and household incomes rise, there is a greater capacity to invest in high-quality electrical safety devices. The affordability of the earth leakage circuit breaker remains a concern, but as local manufacturing and bulk importation increase, costs are expected to decline, making these devices more accessible (Akinola *et al.,* 2022). Additionally, financial incentives such as subsidies, tax exemptions on safety equipment, and flexible payment plans could motivate homeowners and businesses to prioritize the adoption of earth leakage circuit breakers.
- **Technological Advancements and Smart Grid Integration:** The development of smart grid technologies and advanced circuit protection devices presents new opportunities for earth leakage circuit breaker adoption. Modern earth leakage circuit breakers come equipped with digital monitoring capabilities, remote fault detection, and integration with smart home systems, making them more efficient and appealing to consumers (Hassan & Olalekan, 2022). As Nigeria gradually transitions to smart metering and automated power distribution, the earth leakage circuit breaker will play a crucial role in ensuring enhanced electrical safety and reliability.
- **Demand from Industrial and Commercial Sectors:** Nigeria's industrial and commercial sectors are increasingly prioritizing workplace safety and compliance with international standards. Multinational corporations and large industrial players often adhere to global safety practices, which include the installation of earth leakage circuit breakers in electrical systems (Ogbuagu & Chinedu, 2023). As more companies seek ISO certification and improved safety records, earth leakage circuit breaker adoption will likely become a standard requirement, particularly in sectors such as manufacturing, telecommunications, and oil and gas.
- **Government and Private Sector Collaboration:** The Nigerian government, in collaboration with private sector stakeholders, has an opportunity to promote earth leakage circuit breaker adoption through infrastructure projects and policy-driven initiatives. Public-private partnerships (PPPs) in electrical distribution upgrades, housing projects, and safety campaigns can integrate an earth leakage circuit breaker as a standard protective measure. Additionally, utility companies can implement incentive programs for customers who adopt earth leakage circuit breakers, encouraging wider usage across different sectors.
- **Urbanization and Growth in Housing Development:** With rapid urbanization and a surge in real estate developments

across major Nigerian cities, there is a growing demand for modern electrical installations that prioritize safety. Developers and electrical engineers are increasingly considering protective devices such as earth leakage circuit breaker to meet global safety standards and attract buyers (Ojo *et al.,* 2022). Government-backed affordable housing projects can also incorporate an earth leakage circuit breaker as part of their standard electrical infrastructure.

CONCLUSION

Earth Leakage Circuit Breakers in Nigeria can help reduce electrical accidents, improve safety, and meet international safety standards. Although the earth leakage circuit breakers are very useful, they are not widely used in homes, offices, or industries because of problems like high cost, low public awareness, low standard electrical products, and weak enforcement of safety rules. This problem can be solved with the right steps, which are not limited to the following: Government agencies like the Nigerian Electricity Regulatory Commission (NERC) and the Standards Organization of Nigeria (SON) should enforce safety laws strictly to make the earth leakage circuit breaker a required part of all electrical systems. Also, public education, training programs, and awareness campaigns can help people understand how earth leakage circuit breakers protect against electric shocks, fires, and current leakage. To make the earth leakage circuit breaker more affordable and easier to get, the government can support local production, reduce import taxes, and offer financial help. Using a smart earth leakage circuit breaker that can be monitored remotely, in addition to private and public partnerships.

REFERENCES

Akinola, J., Okonkwo, P., and Adeyemi, S. (2022). Economic Constraints in the Adoption of Electrical Safety Devices in Developing Countries. *Journal of Power Systems*, 18(3):120-134.

Adesina, K. O. (2022). "Standardization and Quality Control of Electrical Components in Nigeria. *Nigerian Journal of Engineering and Technology,* 25(1):78-95.

Hassan, M., and Olalekan, T. (2022). Comparative Analysis of Circuit Protection Devices in Nigeria. *Nigerian Journal of Electrical Engineering,* 16(1):45-59.

Mohammed, A., and Adeyemi, T. (2021). Residual Current Devices in Modern Electrical Installations. *International Journal of Electrical Engineering,* 30(4):245-258.

Ogbuagu, C. and Chinedu, L. (2023). The Impact of Counterfeit Electrical Products on Safety in Nigeria. *African Journal of Electrical Safety,* 11(2):89-103.

Ojo, B., Adekunle, S. and Ibeh, K. (2022). Regulatory Challenges in Electrical Safety Compliance in Nigeria. *International Review of Power Systems,* 22(4):203-219.

Olawale, J., and Adebayo, F. (2021). The Role of Electrical Safety Education in Preventing Household Electrocution Cases in Nigeria. *Electrical Safety Journal,* 9(1):67-80.

Okoro, O. I. and Madueme, T. C. (2020). Electrical Safety Challenges in Nigeria: An Analysis of Protective Devices. *International Journal of Power Systems Engineering,* 15 (2):112-125.

Patel, M. and Sharma, S. (2019). Comparative Analysis of Circuit Protection

Devices. *Journal of Power Systems,* 25(1):98-110.

Singh, R. and Kumar, D. (2020). Earth Leakage Circuit Breakers: Principles, Performance, and Global Adoption. *IEEE Transactions on Power Delivery,* 35(4): 1894-1908.

Ugwuegbu, C. C. (2021). "Impact of Electrical Protection Devices on Fire Prevention in Nigeria. *Journal of Electrical Safety Research,* 18(4):230-245.

World Bank Report (2023). "Power Infrastructure and Electrical Safety in Developing Countries: Case Study of Nigeria. World Bank Energy Report, pp. 45-67.