Published: 12th May 2026

ANACHEM JOURNAL
ISSN: 2006-5221 (Online)

GREEN EXTRACTION TECHNIQUES IN NATURAL PRODUCT CHEMISTRY: ADVANCES, EFFICIENCY AND SUSTAINABILITY: A REVIEW

[1*]Anyanwu, B.C., [1]Silas, C.U., [2]Akoh, O.U., [1]Anyanwu, G.C., and [2]Onyekwere, B.C.
[1]Department of Chemistry, Kingsley Ozumba Mbadiwe University, Ideato, Imo State, Nigeria.
[2]Department of Chemistry, Michael Okpara University of Agriculture, Umudike, Abia State, Nigeria.
*Corresponding author e-mail: anyanwubenedict5@gmail.com
DOI: https://doi.org/10.5281/zenodo.20129404

ABSTRACT

Natural products are an important source of biologically active compounds that are used in pharmaceuticals, nutraceuticals, and cosmetics. Their isolation largely depends on extraction methods, many of which involve large volumes of organic solvents and long processing times, as seen in maceration and Soxhlet extraction. These limitations have encouraged the development of alternative approaches that reduce environmental impact while maintaining extraction efficiency. This review examines selected green extraction techniques, including ultrasound-assisted extraction, microwave-assisted extraction, and supercritical fluid extraction. These methods reduce extraction time, reduce solvent consumption, and improve the recovery and selectivity of target compounds. Comparison with conventional techniques highlights clear differences in efficiency, operational conditions, and environmental considerations. Applications in the extraction of major classes of phytochemicals, such as alkaloids, flavonoids, and terpenoids, are also discussed. Although challenges such as equipment costs, process optimization, and scaling remain, these techniques offer practical options to improve the sustainability and overall performance of natural product extraction.

Keywords: Green Extraction; Natural Product Chemistry; Utrasound-Assisted Extraction; Microwave-Assisted Extraction; Supercritical Fluid Extraction.

1. Introduction

Natural product chemistry focuses on the isolation and characterization of compounds from natural sources such as plants, microorganisms, and marine organisms. These secondary metabolites are important in drug discovery due to their diverse biological activities, including antimicrobial, antioxidant, anti-inflammatory, and anticancer effects (Newman & Cragg, 2020). Many drugs are derived from or inspired by natural products, as illustrated in Figure 1 below, highlighting their continued importance in pharmaceutical research (Newman & Cragg, 2020; Anyanwu, 2025). The extraction of bioactive compounds is a key step in these studies. Conventional methods such as maceration, soxhlet extraction, and hydro-distillation are widely used but often involve high solvent consumption, long extraction times, and elevated temperatures, which can degrade heat-sensitive compounds and reduce efficiency (Azwanida, 2015).

To overcome these limitations, green extraction techniques have been developed in accordance with green chemistry

principles, aiming to minimize solvent use, energy consumption, and environmental impact (Chemat et al., 2017). Techniques such as ultrasound-assisted, microwave-assisted, and supercritical fluid extraction improve efficiency while reducing extraction time and solvent requirements. In general, these greener approaches offer improved yield, efficiency, and sustainability, making them suitable for both laboratory and industrial applications (Mgoma et al., 2025).

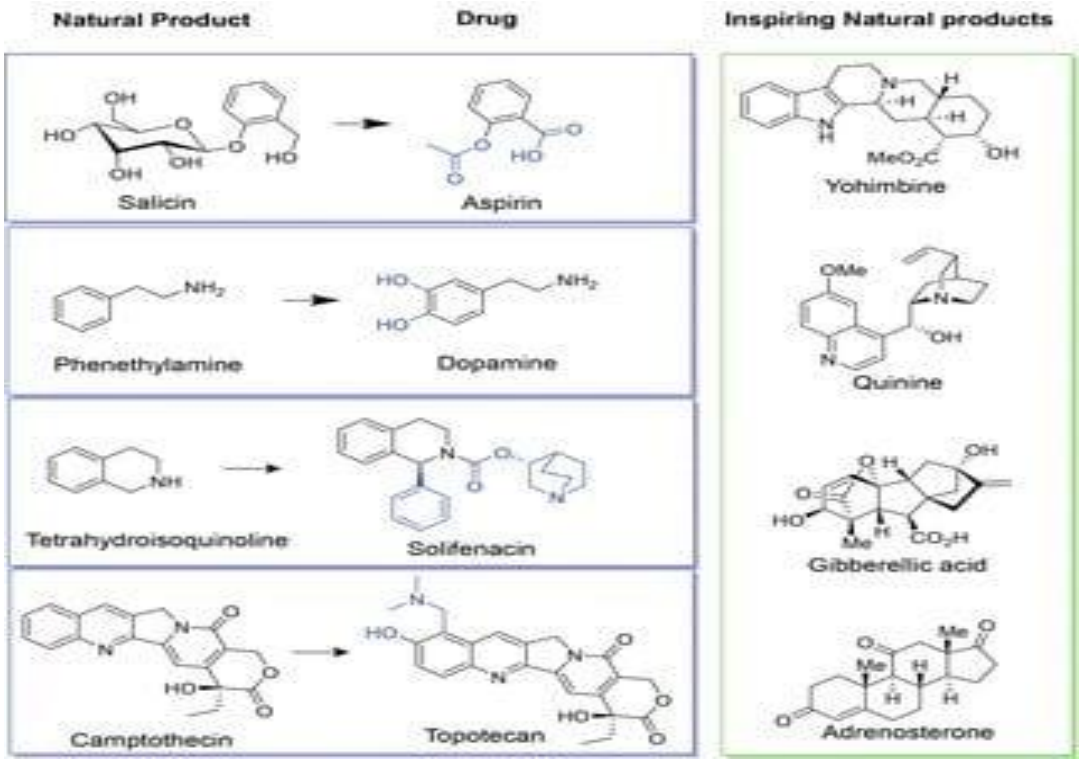

Figure 1: Natural Products as sources of drugs (Adapted from Daniel & Flavio, 2018)

2. Application of Green Chemistry Principles in Green Extraction

Green extraction techniques are designed according to principles of green chemistry to reduce environmental impact while maintaining efficiency in the isolation of natural products. These principles guide the selection of solvents, energy inputs, and operating conditions to achieve safer, more sustainable processes. (Katiyo et al., 2020)

A major principle is waste prevention, in which extraction methods are optimized to maximize yield and reduce by-product formation through improved selectivity, thereby minimizing repeated extraction steps. Another key aspect is the use of safer solvents, encouraging alternatives such as water and ethanol instead of toxic organic solvents. Energy efficiency is also emphasized. Unlike conventional methods that rely on prolonged heating, green extraction techniques use approaches such as ultrasound or microwave irradiation to enhance mass transfer, shorten extraction time, and reduce energy consumption (Owolabi et al., 2022).

Additionally, the use of renewable plant materials as feedstocks aligns with sustainability goals, while mild operating conditions help preserve the integrity and activity of thermostable compounds. Generally, these principles enable safer, more efficient, and environmentally friendly extraction processes suitable for

both research and industrial applications (Martins et al., 2023).

3. Conventional Extraction Techniques

Conventional extraction techniques are widely used in natural product chemistry due to their simplicity, low cost, and minimal equipment requirements, making them suitable for small-scale laboratory work (Ekor, 2014). Maceration involves soaking the plant material in a solvent at room temperature for an extended period, allowing phytochemicals to diffuse into the solvent. Although simple and inexpensive, it is time-consuming and may require repeated agitation, with risks of microbial growth and degradation of heat-sensitive compounds (Ekor, 2014).

Soxhlet extraction is a continuous hot-extraction method in which the solvent is repeatedly cycled through the sample, improving efficiency over maceration. However, it requires long extraction times, high solvent use, and sustained heating, which can degrade thermolabile compounds (Ajayi et al., 2019). Hydrodistillation is used mainly to extract volatile compounds, such as essential oils, by boiling or steaming plant material and condensing the vapors. Although effective for aromatic constituents, it is limited to volatile, heat-stable compounds, and prolonged heating can alter the extract's composition (Lawal et al., 2020).

Despite their usefulness, these conventional methods are limited by high solvent consumption, long processing times, and the potential degradation of sensitive compounds, thereby increasing interest in more efficient and sustainable alternatives (Ajayi et al., 2019).

4. Green Extraction Techniques

Green extraction techniques were developed to overcome the limitations of conventional methods, particularly the high solvent use, energy demand, and environmental impact. They follow principles of green chemistry, aiming to improve efficiency, reduce extraction time, and preserve bioactive compounds under milder conditions, making them suitable for both laboratory and industrial use (Ameer et al., 2017). Common methods include ultrasound-assisted extraction, microwave-assisted extraction, supercritical fluid extraction, pressurized liquid extraction, and enzyme-assisted extraction, as shown in Figure 2 below. These techniques enhance mass transfer and facilitate the release of phytochemicals from plant materials while minimizing degradation of thermolabile compounds (Yusoff et al., 2022).

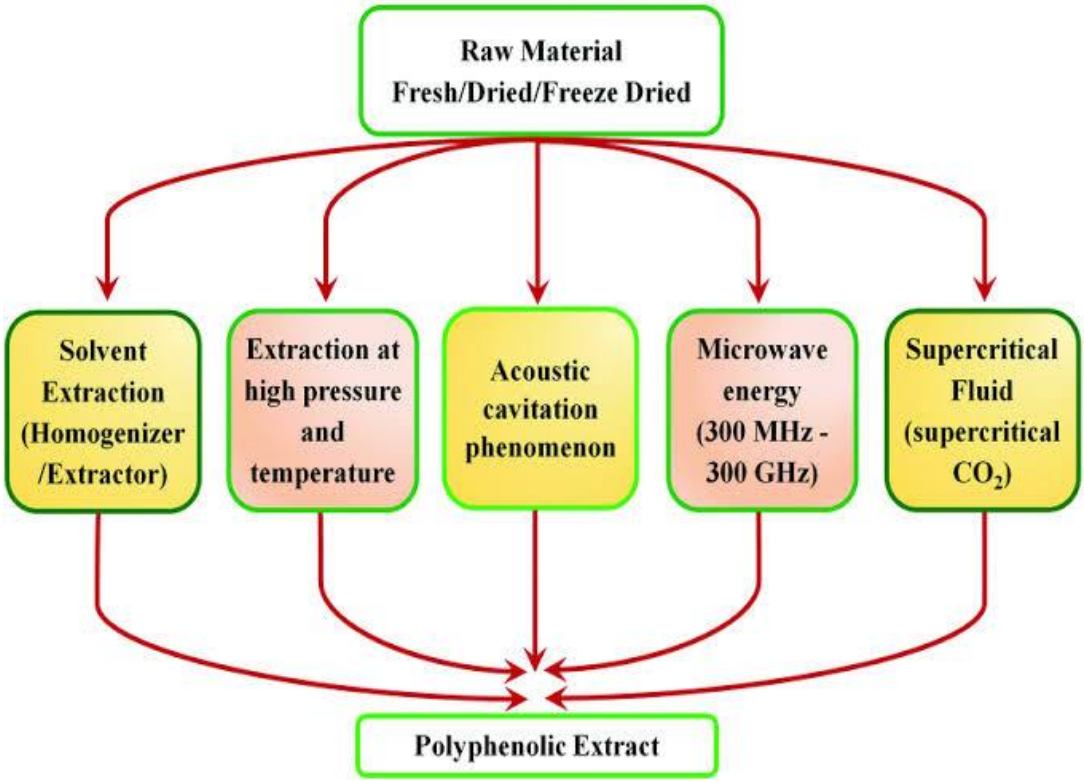

Figure 2. Conventional and green extraction techniques (Adapted from Dhawale et al., 2022).

4.1 Ultrasound-Assisted Extraction (UAE)

Ultrasound-assisted extraction (UAE) is a modern technique that uses high-frequency sound waves to enhance the extraction of bioactive compounds from plant materials. It operates through acoustic cavitation, in which ultrasonic waves generate microscopic bubbles that collapse, producing localized pressure and heat that disrupt cell walls and release intracellular compounds into the solvent, as illustrated in Figure 3 below. These cavitation effects improve solvent penetration and mass transfer, leading to higher extraction efficiency in a shorter time compared to conventional methods. UAE is generally conducted at low temperatures, helping to preserve heat-sensitive compounds and maintain their chemical integrity (Wen et al., 2018).

The technique has been applied to extract phytochemicals such as phenolics, flavonoids, alkaloids, and essential oils. It is simple, uses less solvent, and is adaptable to different scales, although optimization of parameters such as frequency, time, solvent type, and temperature is necessary for optimal performance (Wen et al., 2018).

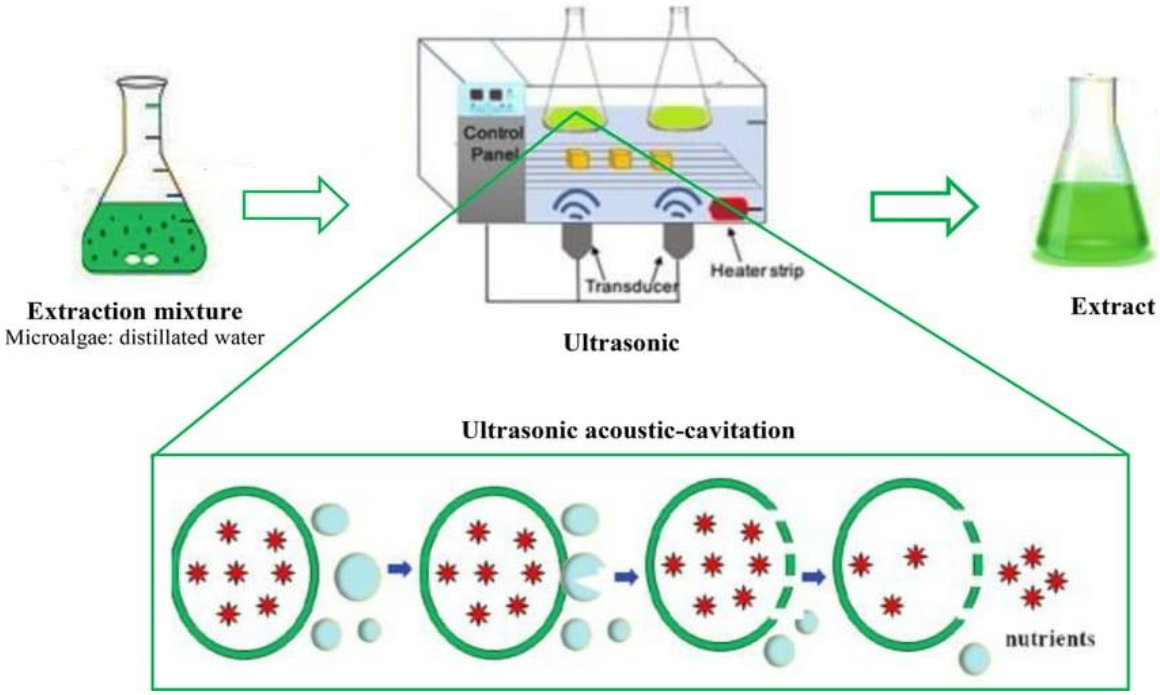

Figure 3. Ultrasound-assisted extraction. Adapted from Jamshidi-Kia *et al.* (2024).

4.2 Microwave-Assisted Extraction (MAE)

Microwave-assisted extraction (MAE) is a green technique that uses microwave energy to heat solvents and plant materials, promoting the release of bioactive compounds. It works through dielectric heating, in which microwave radiation interacts with polar molecules, causing rapid dipole motion that generates heat, disrupts cell walls, and enhances the mass transfer of intracellular compounds into the solvent (Mgoma et al., 2025). MAE, as shown in Figure 4, provides rapid and uniform heating by directly energizing the internal moisture of plant cells, unlike conventional methods that rely on external heat transfer. This leads to internal pressure build-up, cell rupture, and improved diffusion of phytochemicals, resulting in shorter extraction times and higher yields (Dahmoune et al., 2019). The technique typically uses polar solvents, such as water, ethanol, or their mixtures, which efficiently absorb microwave energy. It is suitable for thermally stable compounds, but parameters such as microwave power, time, solvent type, and temperature must be carefully controlled to avoid degradation. In general, MAE offers reduced solvent use, faster processing, and improved efficiency compared to conventional methods, making it useful for analytical and preparative applications (Dahmoune et al., 2019).

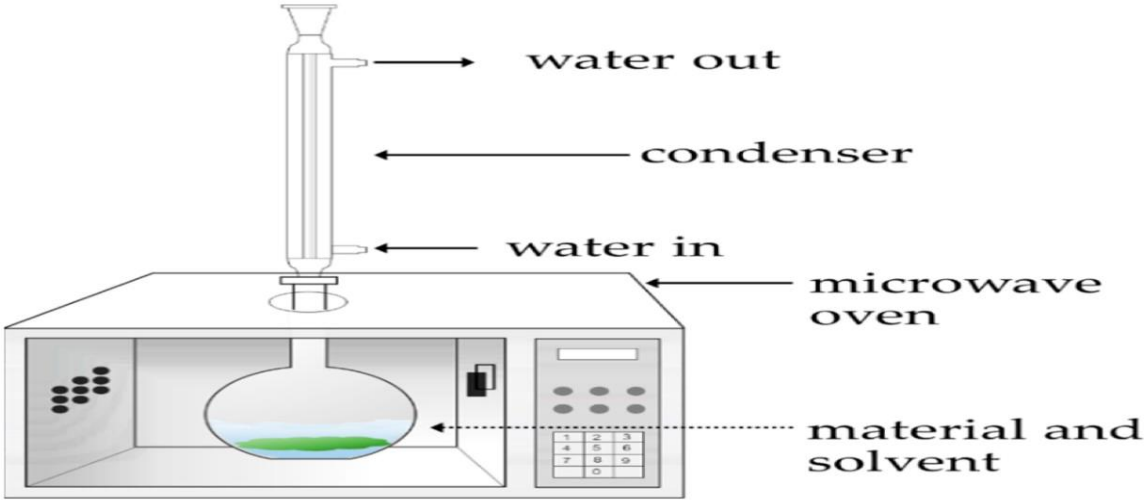

Figure 4: Microwave-assisted extraction mode (Adapted from Tanruean et al., 2025)

4.3 Supercritical Fluid Extraction (SFE)

Supercritical fluid extraction (SFE) is a green technique that uses fluids above their critical temperature and pressure, where they exhibit both liquid-like and gas-like properties. Carbon dioxide is commonly used due to its low toxicity, moderate critical conditions, and environmental compatibility. In this state, it provides good diffusivity and solvating power, enabling efficient penetration of plant materials and enhanced extraction of target compounds (Herrero et al., 2018). Figure 5 shows a schematic representation of the supercritical fluid extraction equipment.

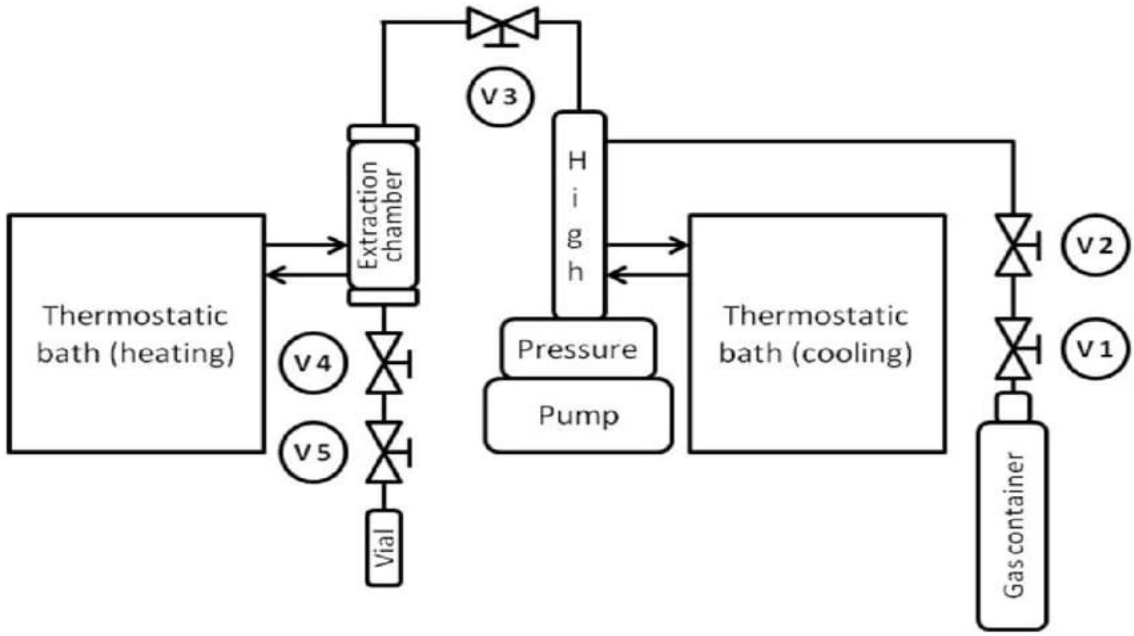

Figure 5: Schematic representation of the supercritical fluid extraction equipment (Adapted from Stefanov et al., 2019).

The extraction efficiency in SFE depends mainly on pressure and temperature, which affect the fluid's density and solvating ability. Higher pressure increases CO_2 density, improving its ability to extract non-polar and slightly polar compounds such as essential oils. For more polar compounds, small amounts of cosolvents, such as ethanol, are added to improve solubility and selectivity (Reverchon & De Marco, 2020). A key advantage of SFE is its operation at relatively low temperatures, which helps prevent thermal degradation of sensitive compounds. It also eliminates the need for hazardous organic solvents, and the final extract is typically solvent-free after CO_2 depressurization, making it suitable for food, pharmaceutical, and nutraceutical applications (Reverchon & De Marco 2020).

Despite these advantages, SFE requires expensive high-pressure equipment and careful optimization of parameters such as pressure, temperature, flow rate, and co-solvent composition. Nevertheless, its selectivity, environmental benefits, and ability to produce high-quality extracts make it a valuable method in modern natural product extraction (Azmir et al., 2013).

4.4 Pressurized Liquid Extraction (PLE) / Enzyme-Assisted Extraction (EAE)

Pressurized liquid extraction (PLE), also known as accelerated solvent extraction, uses elevated temperature and pressure to enhance the extraction of bioactive compounds from plant materials. Under these conditions, solvents remain in the liquid phase above their boiling points, leading to improved solubility, reduced viscosity, and increased diffusion rates. These factors collectively improve extraction efficiency while significantly reducing extraction time and solvent consumption (Chipaca-Domingos et al., 2023). PLE is widely used to extract a variety of phytochemicals, including phenolic compounds, flavonoids, and alkaloids. The technique is often automated, allowing for reproducibility and minimal human intervention. Despite its advantages, the use of elevated temperatures necessitates careful optimization to prevent the degradation of thermolabile compounds. Parameters such as temperature, pressure, solvent type, and extraction duration must be carefully controlled to achieve optimal yields and preserve compound integrity (Alasalvar & Kaya, 2021). Figure 6 below shows a schematic of the pressurized liquid extraction (PLE) equipment.

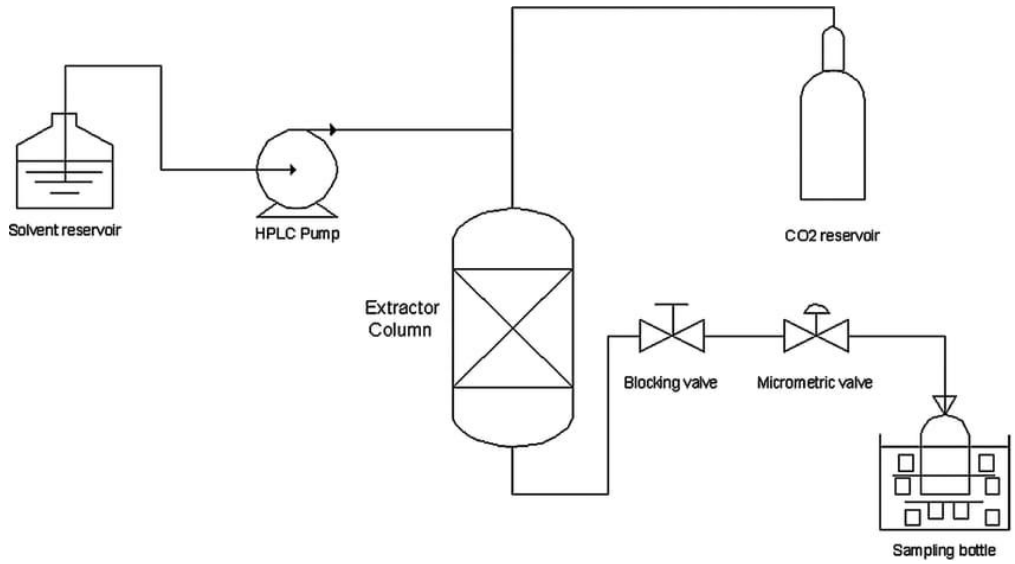

Figure 6: schematic representation of the pressurized liquid extraction equipment (PLE). (Adapted from Selvamuthukumara & Shi, 2017)

Enzyme-assisted extraction (EAE) is another environmentally friendly technique that uses enzymes to break down structural components of plant cell walls, thereby facilitating the release of intracellular compounds, as shown in Figure 7 below. Enzymes such as cellulases and pectinases degrade cellulose and pectin networks, increasing permeability and improving solvent access to target metabolites (Ravindran & Jaiswal, 2016). This results in enhanced extraction efficiency under mild conditions, typically at moderate temperatures and near-neutral pH (Puri et al., 2012). EAE is particularly effective for extracting compounds that are tightly bound within plant matrices, including polyphenols, flavonoids, and polysaccharides. The mild operating conditions help preserve the stability of sensitive compounds while reducing the energy consumption and solvent requirements. However, factors such as enzyme specificity, cost, and reaction time must be considered when optimizing the process for practical applications in natural product chemistry (Brah et al., 2024).

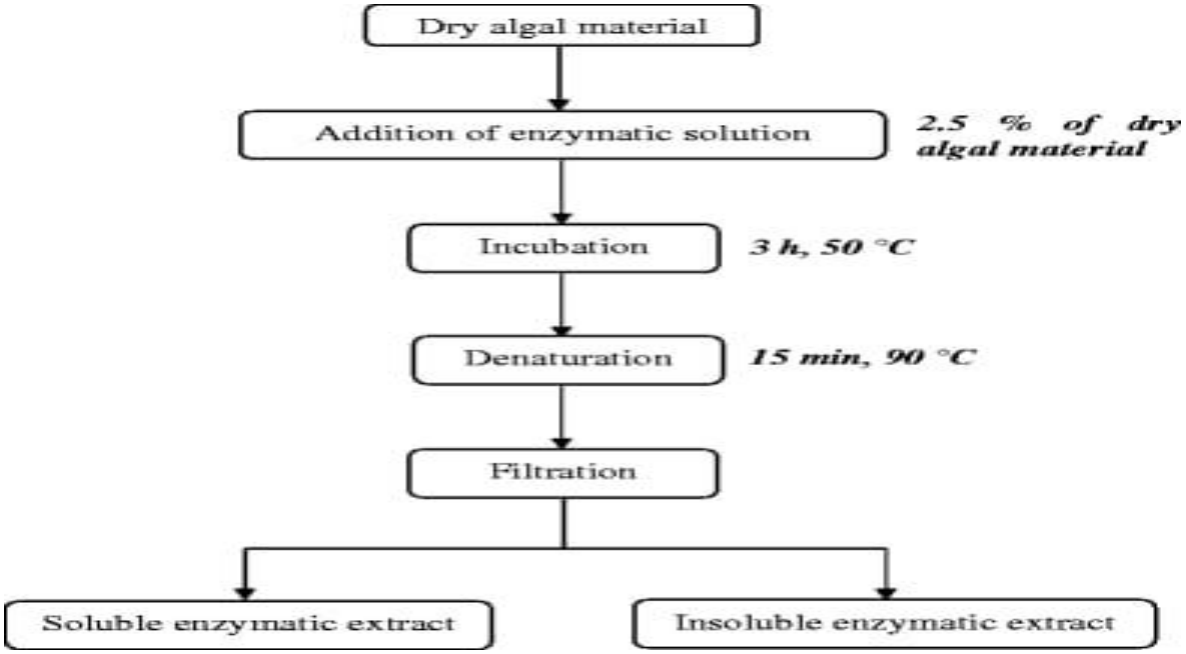

Figure 7: Schematic representation of enzyme-assisted extraction (EAE) (Adapted from Puspita et al., 2017).

5. Applications of Green Extraction Techniques in Natural Product Chemistry

Green extraction techniques are widely applied in natural product chemistry to isolate and characterize bioactive compounds from medicinal plants (Bhadange & Carpenter, 2024). They are preferred due to their efficiency, lower environmental impact, and ability to preserve thermolabile constituents. Methods such as microwave-assisted extraction, supercritical fluid extraction, pressurized liquid extraction, and enzyme-assisted extraction have been used to extract compounds including alkaloids, flavonoids, terpenoids, and phenolics from

various plant sources (Schoss & Kočevar, 2024). In phytochemical analysis, these techniques are often used for the preliminary extraction of crude samples, improving yield while reducing the use of hazardous solvents. Solvent systems such as aqueous ethanol or CO_2-based methods enable selective extraction with minimal contamination, thereby supporting downstream purification and structural characterization using techniques such as NMR and IR spectroscopy (Anyanwu et al., 2021).

In industrial applications, green extraction methods are used to produce high-purity natural products for pharmaceutical and nutraceutical applications. Supercritical fluid extraction is particularly notable for applications such as coffee decaffeination, essential oil extraction, and antioxidant recovery (Anusha & Sivakumar, 2023). In total, these methods promote sustainability by reducing solvent waste, energy use, and environmental pollution while improving extraction quality and efficiency. Their integration with modern analytical techniques continues to improve the study and development of natural products (Kumar & Pandey, 2021). Figure 8 gives the advantages of green extraction technologies.



Figure 8: Advantages of green extraction technologies (Adapted from Rodríguez García et al., 2022).

6. Challenges and Limitations of Green Extraction Techniques

Despite the numerous advantages associated with green extraction techniques, several challenges limit their widespread adoption in natural product chemistry. One of the primary limitations is the high initial cost of equipment required for advanced techniques such as supercritical fluid extraction and microwave-assisted extraction. These systems often require specialized high-pressure or high-frequency components that may not be readily available in many research laboratories, particularly in

developing regions (Rostagno & Prado, 2020).

Another significant challenge is the need to carefully optimize operational parameters. Factors such as temperature, pressure, solvent composition, extraction time, and particle size can significantly influence extraction efficiency and reproducibility. Inadequate optimization can lead to inconsistent yields or degradation of sensitive bioactive compounds. This requirement for method development can be time-consuming and may require specialized technical expertise (Jiang et al., 2025). Selectivity can also pose limitations in some green extraction methods. Although techniques like supercritical fluid extraction offer tunable selectivity, others may extract a broad spectrum of compounds, resulting in complex mixtures that require further purification. This increases the workload during downstream processing, including the chromatographic separation and structural characterization of individual constituents (Bhadange & Carpenter, 2024). Furthermore, scalability remains a concern for certain green extraction methods. Although laboratory-scale applications have been well established, translating these processes to the industrial scale may present engineering and economic challenges. Issues such as energy consumption, process control, and equipment durability must be addressed to ensure efficient large-scale implementation. Nevertheless, ongoing research continues to improve the feasibility and efficiency of these techniques for broader applications in natural product chemistry (Reverchon & De Marco, 2020).

7. Strategies for Overcoming Challenges in Green Extraction Techniques

One way to address the high cost and technical complexity of green extraction techniques is through improved equipment design and automation. Advances in engineering have produced more compact and energy-efficient systems, while automated controls allow precise regulation of parameters such as temperature, pressure, and time, improving reproducibility and reducing errors (Bhadange & Carpenter, 2024). Optimization tools such as the response surface methodology (RSM) and the design of experiments (DoE) are also used to identify optimal extraction conditions. These statistical approaches evaluate multiple variables simultaneously, reducing experimental trials while improving yield and efficiency (Bezerra et al., 2018).

Hybrid techniques offer another solution by combining methods such as microwave-assisted and enzyme-assisted extraction to improve cell disruption and mass transfer under mild conditions, making them suitable for thermolabile compounds (Rostagno & Prado, 2020).

8. Future Perspectives and Conclusions

The future of green extraction techniques in natural product chemistry is promising, driven by the growing demand for sustainable, environmentally friendly processes. Continued advancements in extraction technologies are expected to improve efficiency, reduce costs, and enhance scalability. Integration of green extraction methods with modern analytical tools such as high-performance liquid chromatography (HPLC), gas chromatography mass spectrometry (GC-MS), and nuclear magnetic resonance (NMR) spectroscopy will facilitate rapid identification and characterization of bioactive compounds (Anyanwu et al., 2024; Bhadange & Carpenter, 2024).

Emerging hybrid techniques that combine two or more green extraction methods are gaining attention due to their potential to enhance extraction efficiency and selectivity. For example, combining microwave-assisted extraction with enzyme-assisted extraction can improve

cell wall disruption and mass transfer, leading to higher yields of target compounds. Such synergistic approaches are expected to play a significant role in optimizing extraction processes in future research (Mketo & Nomngongo, 2020). In addition, the development of novel green solvents, including deep eutectic solvents and ionic liquids, presents new opportunities to improve extraction performance while maintaining environmental sustainability. These solvents offer tuneable properties, low volatility, and reduced toxicity, making them suitable alternatives to conventional organic solvents in natural product isolation (Huang et al., 2019).

In conclusion, green extraction techniques represent a significant advancement in natural product chemistry by promoting sustainable, efficient, and environmentally friendly methods for isolating bioactive compounds. Although challenges such as cost, optimization, and scalability persist, ongoing research and technological innovations are expected to overcome these limitations. The continued adoption and refinement of these techniques will play a crucial role in advancing phytochemical research, drug discovery, and industrial applications.

References

Ajayi, O. A., Akinruli, F. T., & Oyetayo, F. L. (2019). Comparison of Soxhlet and maceration extraction methods on the yield and phytochemical constituents of selected medicinal plants. *Journal of Medicinal Plants Research*, 13(12), 285–292. https://doi.org/10.5897/jmpr2019.6780.

Alasalvar, H., & Kaya, M. (2021). Pressurized hot water extraction of phenolic compounds with a focus on eriocitrin and hesperidin from lemon peel. International *Journal of Food Science & Technology*, 58(4), 2060–2070. https://doi.org/10.1111/ijfs.15412.

Ameer, K., Shahbaz, H. M., & Kwon, J. H. (2017). Green extraction methods for polyphenols from plant matrices and their byproducts: A review. *Comprehensive Reviews in Food Science and Food Safety*, 16(2), 295–315. https://doi.org/10.1111/1541-4337.12253.

Anusha, V., & Sivakumar, P. (2023). A review on supercritical fluid extraction. *Current Journal of Applied Science and Technology,* 42(41), 1–12. https://doi.org/10.9734/cjast/2023/v42i414262.

Anyanwu, B. C. (2025). Green synthesis of amides through direct acid–amine coupling under solvent-free and aqueous conditions. *Nigerian Research Journal of Chemical Sciences*, 13(2).

Anyanwu, B. C., Akoh, O. U., & Otuokere, I. E. (2024). Development and optimization of HPLC methods for the chiral separation of arylpyrazole, chloroacetanilide and organochlorine pesticides: Case studies of benzobicyclon, acetochlor and chlordane. *Journal of Chemical Society of Nigeria,* 49(5), 855–864. https://doi.org/10.46602/jcsn.v49i5.1014.

Anyanwu, B. C., Otuokere, I. E., Echeme, J. O., Akoh, O. U., Njoku, C. P., Ohenhen, O. N., & Ikeadim, O. C. (2021). Isolation and characterization of a secondary metabolite from the aerial parts of Launaea (Lactuca) taraxacifolia. *Journal of Chemical Society of Nigeria*, 46(4), 661–672. https://doi.org/10.46602/jcsn.v46i4.644.

Azmir, J., Zaidul, I. S. M., Rahman, M. M., Sharif, K. M., Mohamed, A., Sahena, F., & Omar, A. K. M. (2013). Techniques for extraction of bioactive compounds from plant materials: A review. *Journal of Food Engineering, 117* (4), 426–436. https://doi.org/10.1016/j.jfoodeng.2013.01.014.

Azwanida, N. N. (2015). A review on the extraction methods uses in medicinal plants, principle, strength and limitation.

Medicinal & Aromatic Plants, *4*(3), 196. https://doi.org/10.4172/2167-0412.1000196.

Bezerra, M. A., Santelli, R. E., Oliveira, E. P., Villar, L. S., & Escaleira, L. A. (2018). Response surface methodology (RSM) as a tool for optimization in analytical chemistry. *Talanta*, 181, 1–12. https://doi.org/10.1016/j.talanta.2018.01.065.

Bhadange, Y. A., & Carpenter, J. (2024). A comprehensive review on advanced extraction techniques for retrieving bioactive components from natural sources. *ACS Omega*, 9(29), 31274–31297. https://doi.org/10.1021/acsomega.4c02718.

Brah, A. S., Obuah, C., & Adokoh, C. K. (2024). Innovations and modifications of current extraction methods and techniques of citrus essential oils: A review. *Discover Applied Sciences,* 6, 460. https://doi.org/10.1007/s42452-024-06100-z.

Chemat, F., Vian, M. A., & Cravotto, G. (2017). Green extraction of natural products: Concept and principles. *International Journal of Molecular Sciences,* *18*(4), 708. https://doi.org/10.3390/ijms18040708.

Chipaca-Domingos, H. S., Ferreres, F., Fornari, T., Gil-Izquierdo, A., Pessela, B. C., & Villanueva-Bermejo, D. (2023). Pressurized liquid extraction for the production of extracts with antioxidant activity from Cochlospermum angolense Welw. *Foods*, 12(6), 1186. https://doi.org/10.3390/foods12061186.

Dahmoune, F., Nayak, B., Moussi, K., Remini, H., & Madani, K. (2019). Optimization of microwave-assisted extraction of phenolic compounds from Ficus carica leaves using response surface methodology. *Food Chemistry*, 276, 260–268. https://doi.org/10.1016/j.foodchem.2018.09.167

Daniel G., & Flavio E. (2018). Natural products as sources of drugs. *Revista Virtual de Química,* 10 (1), 100–123. doi:10.1590/s2175-97902018000001004.

Dhawale, P. V., Vineeth, S. K., Gadhave, R. V., Jabeen, F. M., Supekar, M. V., Thakur, V. K., & Raghavan, P. (2022). Tannin as a renewable raw material for adhesive applications: A review. *Materials Advances*, 3(8), 3365–3388. https://doi.org/10.1039/d1ma00841b.

Ekor M. (2014). The growing use of herbal medicines: Issues related to adverse reactions and challenges in monitoring safety. *Frontiers in Pharmacology*, *4*, 177. https://doi.org/10.3389/fphar.2013.00177.

Herrero, M., Ibañez, E., & Cifuentes, A. (2018). Green extraction processes, biotechnology and sustainability: A review. *Trends in Analytical Chemistry*, 71, 46–53. https://doi.org/10.1016/j.trac.2015.12.003.

Huang, J., Guo, X., Xu, T., Fan, L., Zhou, X., & Wu, S. (2019). Ionic deep eutectic solvents for the extraction and separation of natural products. *Journal of Chromatography A.* https://doi.org/10.1016/j.chroma.2019.03.046.

Jamshidi-Kia, F., Saeidi, K., Lorigooini, Z., Samani, B. H., & Barzegar, R. (2024). Optimization of extraction of liquid extract from Chlorella vulgaris via cavitation-based techniques. *Journal of Food Process Engineering*, 47(8), e14665. https://doi.org/10.1111/jfpe.14665.

Jiang, H., Dong, Y., & Pan, S. (2025). Optimization of the extraction process and comprehensive evaluation of the antimicrobial and antioxidant properties of different polar parts of the ethanol extracts of Cannabis sativa L. *ACS Omega*, 10(17), 17453–17467. https://doi.org/10.1021/acsomega.4c10986.

Katiyo, W., De Kock, H. L., & Taylor, J. R. N. (2020). Improved extraction of phytochemicals using green technologies: A review. *Food Reviews International*, 36(5), 480–499. https://doi.org/10.1080/87559129.2019.1640763

Kumar, S., & Pandey, A. K. (2021). Chemistry and biological activities of flavonoids: An overview. *The Scientific World Journal*, 2021, Article 1620919. https://doi.org/10.1155/2021/1620919.

Lawal, O. A., Ogunwande, I. A., Opoku, A. R., & Oyedeji, A. O. (2020). Chemical composition and antibacterial activity of essential oils obtained by hydrodistillation from selected Nigerian plants. *Journal of Essential Oil Research*, 32(3), 232–240. https://doi.org/10.1080/10412905.2019.1704562.

Martins, R., Barbosa, A., Advinha, B., Sales, H., Pontes, R., & Nunes, J. (2023). Green extraction techniques of bioactive compounds: A state-of-the-art review. *Processes*, 11(8), 2255. doi:10.3390/pr11082255.

Mgoma, S. T., Basitere, M., Mshayisa, V. V., & De Jager, D. (2025). A systematic review on sustainable extraction, preservation, and enhancement in food processing: The advancement from conventional to green technology through ultrasound. *Processes*, 13(4), 965. https://doi.org/10.3390/pr13040965.

Mketo, N., & Nomngongo, P. N. (2020). An improved microwave-assisted sequential extraction method followed by spectrometric analysis for metal distribution determination in South African coal samples. *Scientific Reports*, 10, 14841. https://doi.org/10.1038/s41598-020-71963-2.

Newman, D. J., & Cragg, G. M. (2020). Natural products as sources of new drugs over the nearly four decades from 1981 to 2019. *Journal of Natural Products*, 83(3), 770–803. https://doi.org/10.1021/acs.jnatprod.9b01285.

Owolabi, M. S., Oguntoye, O. S., Olatunji, G. A., & Adedeji, J. O. (2022). Ultrasound- and microwave-assisted green extraction of bioactive compounds from plant materials: Process optimization and intensification. *Heliyon*, 8(11), e11345. https://doi.org/10.1016/j.heliyon.2022.e11345

Puri, M., Sharma, D., & Barrow, C. J. (2012). Enzyme-assisted extraction of bioactives from plants. *Trends in Biotechnology*, 30(1), 37–44. https://doi.org/10.1016/j.tibtech.2011.06.014.

Puspita, M., Déniel, M., Widowati, I., Radjasa, O. K., Douzenel, P., Marty, C., Vandanjon, L., Bedoux, G., & Bourgougnon, N. (2017). Total phenolic content and biological activities of enzymatic extracts from Sargassum muticum (Yendo) Fensholt. *Journal of Applied Phycology*, 29(5), 2521–2537. https://doi.org/10.1007/s10811-017-1086-6.

Ravindran, R., & Jaiswal, A. K. (2016). Enzyme-assisted extraction of bioactive compounds from plant materials: A review. *Critical Reviews in Food Science and Nutrition*, 56(13), 2081–2090. https://doi.org/10.1080/10408398.2013.867476.

Reverchon, E., & De Marco, I. (2020). Supercritical fluid extraction and fractionation of natural matter. *The Journal of Supercritical Fluids*, 166, 104997. https://doi.org/10.1016/j.supflu.2020.104997.

Rodríguez García, S. L., & Raghavan, V. (2022). Green extraction techniques from fruit and vegetable waste to obtain bioactive compounds: A review. *Critical Reviews in Food Science and Nutrition*, 62(23), 6446–6466. https://doi.org/10.1080/10408398.2021.1901651.

Rostagno, M. A., & Prado, J. M. (2020). Natural product extraction: Principles and applications. *Royal Society of Chemistry.* https://doi.org/10.1039/9781788016806

Schoss, K., & Kočevar Glavač, N. (2024). Supercritical CO_2 extraction vs. hexane extraction and cold pressing: Comparative analysis of seed oils from six plant species. *Plants*, 13(23), 3409. https://doi.org/10.3390/plants13233409.

Selvamuthukumaran, M., & Shi, J. (2017). Recent advances in extraction of antioxidants from plant by-products processing industries. *Food Quality and Safety*, 1(1), 61–81. https://doi.org/10.1093/fqsafe/fyx004.

Stefanov, S. M., Fetzer, D. L., Rieder, A. C., Corazza, M. L., & Stateva, R. P. (2019). Extraction and characterization of burdock extracts (leaves, seeds and roots) with compressed solvents technologies. *Bulgarian Chemical Communications,* 51(B), 35–38. https://doi.org/10.34049/bcc.51.B.019

Tanruean, K., Luangkamin, S., Srisurat, T., Bunmusik, W., & Suttiarporn, P. (2025). Optimization of microwave-assisted extraction process for production of polyphenol-rich crude extract from Cinnamomum iners leaves. *Applied Sciences*, 15(3), 1265. https://doi.org/10.3390/app15031265

Wen, C., Zhang, J., Zhang, H., Dzah, C. S., Zandile, M., Duan, Y., Ma, H., & Luo, X. (2018). Advances in ultrasound assisted extraction of bioactive compounds from cash crops: A review. *Ultrasonics Sonochemistry*, 48, 538–549. https://doi.org/10.1016/j.ultsonch.2018.07.018

Yusoff, I. M., Mat Taher, Z., Rahmat, Z., & Chua, L. S. (2022). A review of ultrasound-assisted extraction for plant bioactive compounds: Phenolics, flavonoids, thymols, saponins and proteins. *Food Research International*, 157, 111268. https://doi.org/10.1016/j.foodres.2022.111268.